DOS TRANSISTORES

AMPLIFICADOR CON UN TRANSISTOR NPN Y OTRO PNP.

a) Polarización. β = 100 y Vbe 0 0,7V.

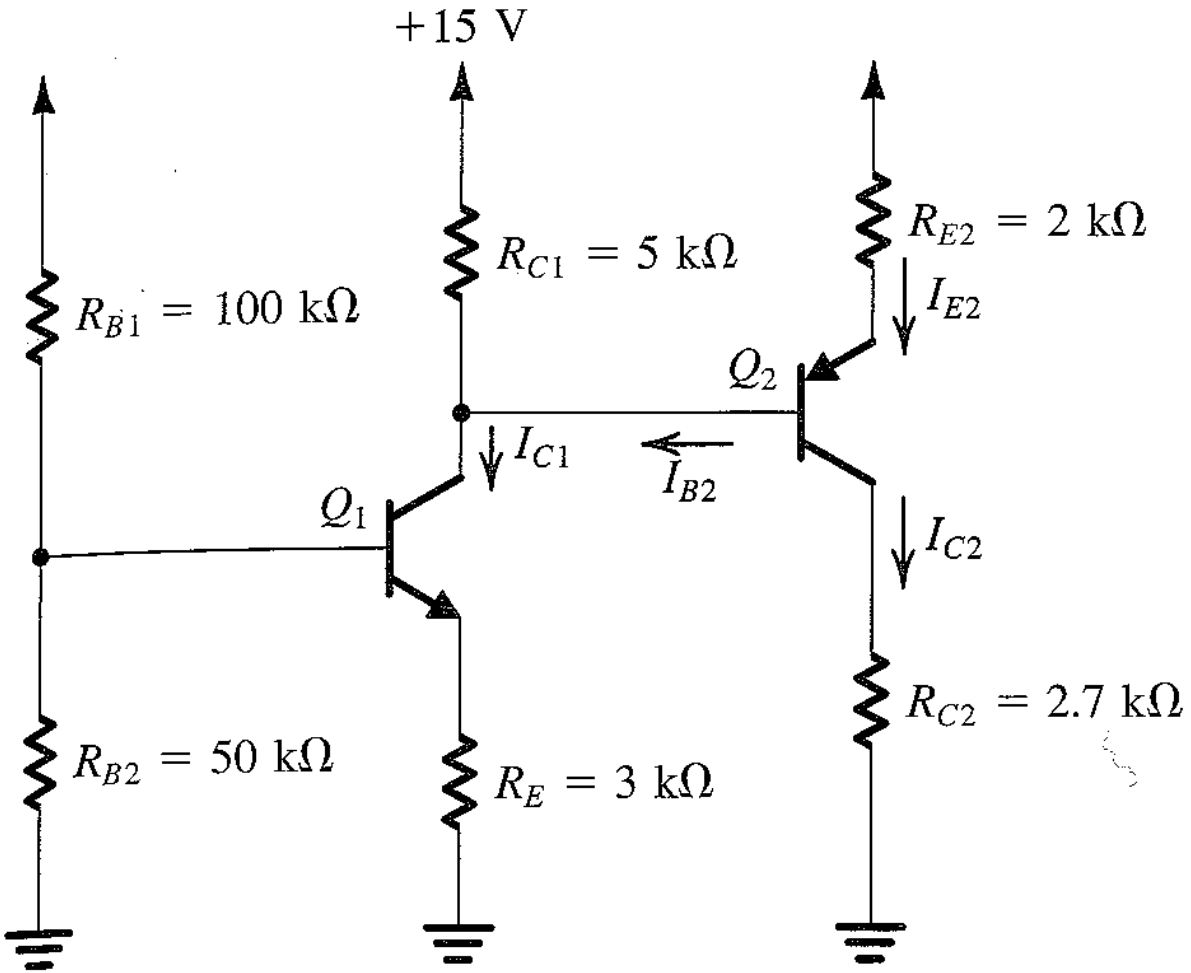

En primer lugar se calcula el Thevenin equivalente del circuito de base de Q_1 y todas las variables relacionadas

$$V_{BB} = +15\frac{R_{B2}}{R_{B1}+R_{B2}} = 15\frac{50}{100+50} = +5\text{ V}$$

$$R_{BB} = (R_{B1} \,//\, R_{B2}) = (100 \,//\, 50) = 33.3\text{ k}\Omega$$

$$V_{BB} = I_B R_{BB} + V_{BE} + I_E R_E \qquad I_E = \frac{V_{BB}-V_{BE}}{R_E+[R_{BB}/(\beta+1)]}$$

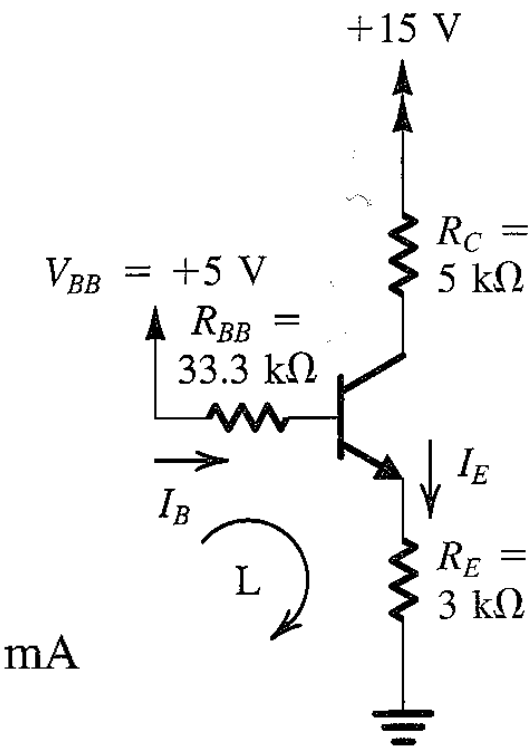

$$I_E = \frac{5-0.7}{3+(33.3/101)} = 1.29\text{ mA} \qquad I_B = \frac{1.29}{101} = 0.0128\text{ mA}$$

$$V_B = V_{BE} + I_E R_E = 0.7 + 1.29\times 3 = 4.57\text{ V}$$

$$I_C = \alpha I_E = 0.99\times 1.29 = 1.28\text{ mA} \qquad I_{B1} = 0.0128\text{ mA}$$

En Q1 hay que tener en cuenta que por R_{C1} no circula I_{C1} sino I_{C1}-I_{B2}

Las ecuaciones que se pueden escribir ahora son:

$$15V = 2k\Omega x I_{E2} + V_{EB} + V_{C1} \qquad V_{C1} = 15V - \left(I_{C1} - I_{B2}\right) x 5k\Omega$$

$$15V = 2k\Omega x I_{E2} + 0,7V + 15V - \left(I_{C1} - \frac{I_{E2}}{101}\right) x 5k\Omega$$

$$I_{E2}\left(2k\Omega - \frac{5k\Omega}{101}\right) = 1,28mA x 5k\Omega - 0,7V = 5,7V \qquad I_{E2} = 2,78mA$$

$$I_{B2} = \frac{2,78mA}{101} = 0,0275mA \qquad I_{RC1} = I_{C1} - I_{B2} = 1,252mA$$

$$V_{C1} = 15V - 5k\Omega x 1,252mA = 8,74V \qquad V_{E2} = 8,74V + 0,7 = 9,44V$$

$$I_{C2} = \beta I_{B2} = 100 x 0,0275 = 2,75mA \qquad V_{C2} = 2,7k\Omega x I_{C2} = 7,43V$$

En la gráfica están todos los voltajes y corrientes, incluyendo las corrientes que circulan por las resistencias del circuito de base del primer transistor.

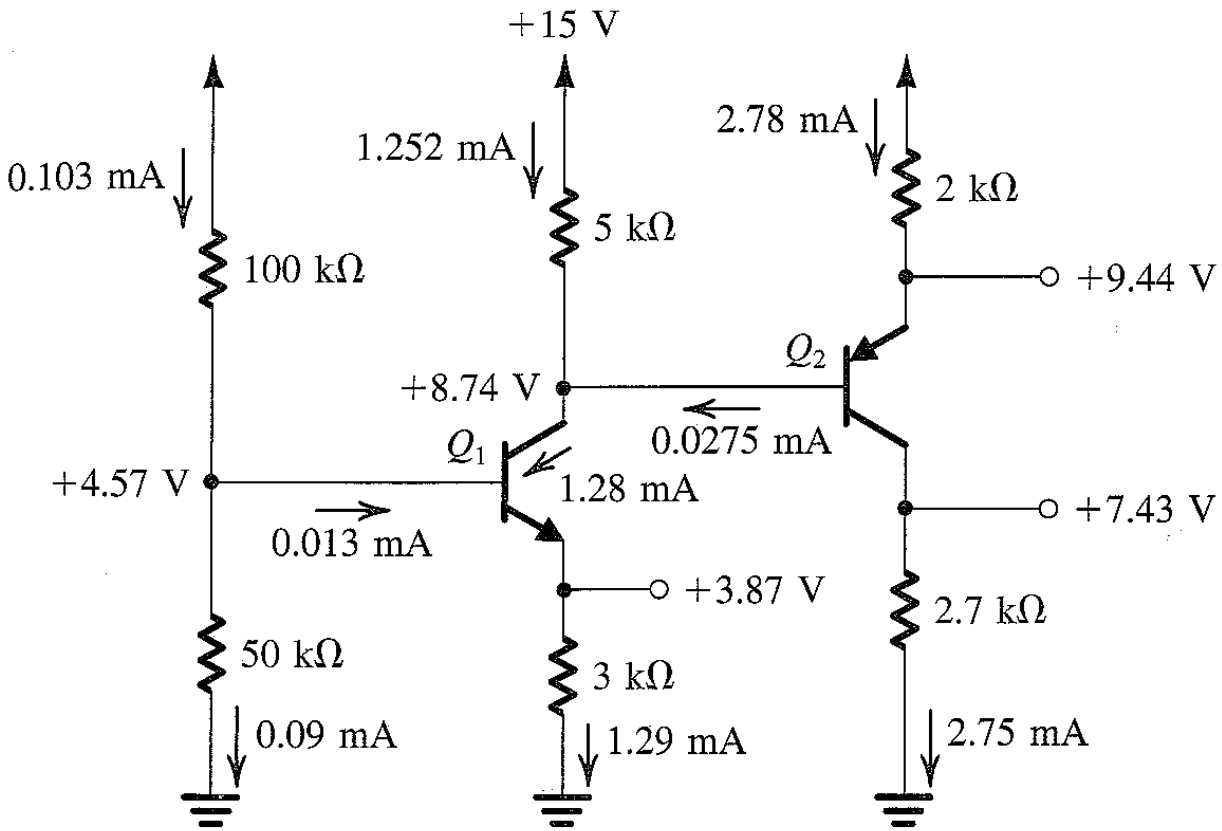

b) Análisis de pequeña señal

$$g_{m_1} = \frac{I_{C1}}{V_T} = \frac{1{,}28\,mA}{25\,mV} = 51{,}2\ \frac{mA}{V}$$

$$r_{\pi_1} = \frac{\beta}{g_m} = \frac{100}{51{,}2\,\frac{mA}{V}} = 1{,}95\ k\Omega$$

$$g_{m_2} = \frac{I_{C2}}{V_T} = \frac{2{,}753\,mA}{25\,mV} = 110\ \frac{mA}{V}$$

$$r_{\pi_2} = \frac{\beta}{g_m} = 0{,}909\ k$$

Análisis AC usando el modelo π

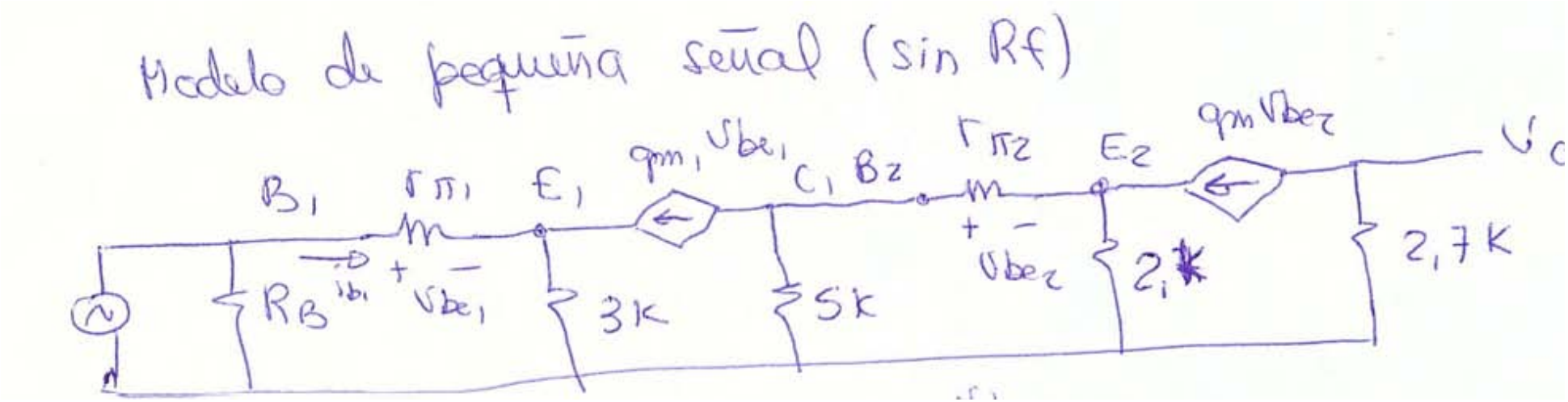

Reflejando las resistencias de emisor hacia las bases

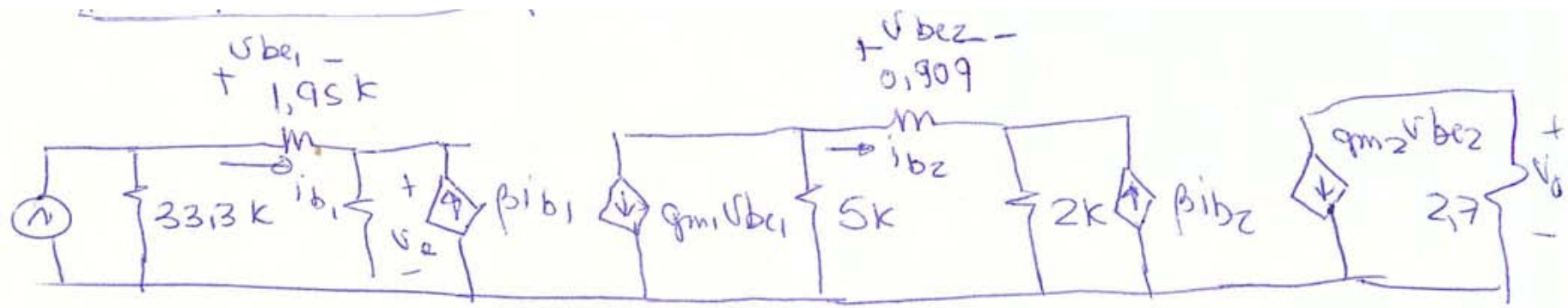

Al calcular valores:

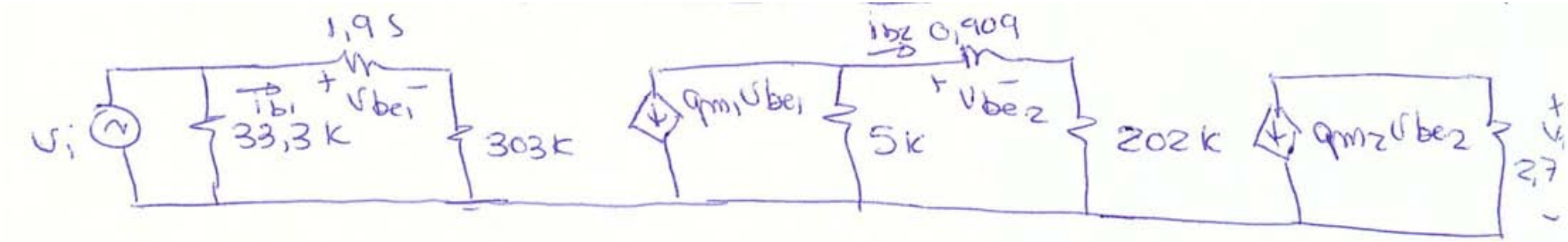

$$v_o = -g_{m2}\, 2{,}7\, v_{be2}$$

$$v_{be2} = 0{,}909\, i_{b2}$$

$$i_{b2} = \frac{5}{5+0{,}909+202}\left(-g_{m1}\, v_{be1}\right)$$

$$v_{be1} = 1{,}95\, i_{b1}$$

$$i_{b1} = \frac{v_i}{1{,}95+303}$$

Resultados:

$$v_o = 2{,}7(110)\,0{,}909\,\frac{5}{5+0{,}909+200}(51{,}2)\,1{,}95\,\frac{v_i}{1{,}95+303} = 2{,}14\,v_i$$

$$\boxed{A_v = \frac{v_o}{v_i} = 2{,}14}$$

$$\boxed{R_i = 304{,}95\,k \,\|\, 33\,k = 29{,}7\,k}$$

$$\boxed{R_o = 2{,}7\,k}$$

PROBLEMA 1

Para el circuito mostrado, calcule I_D y V_{DS}.

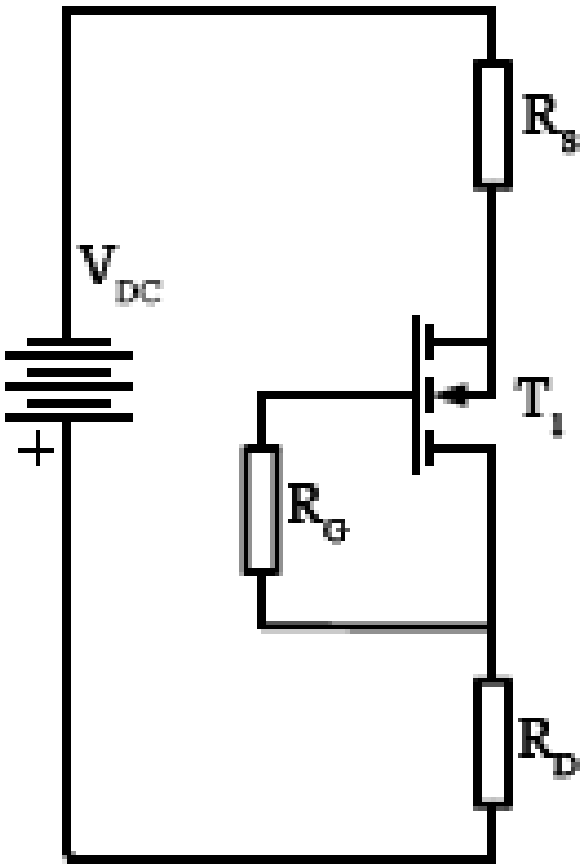

$|V_{th}| = 3{,}4V$

$k = 20mA/V^2$

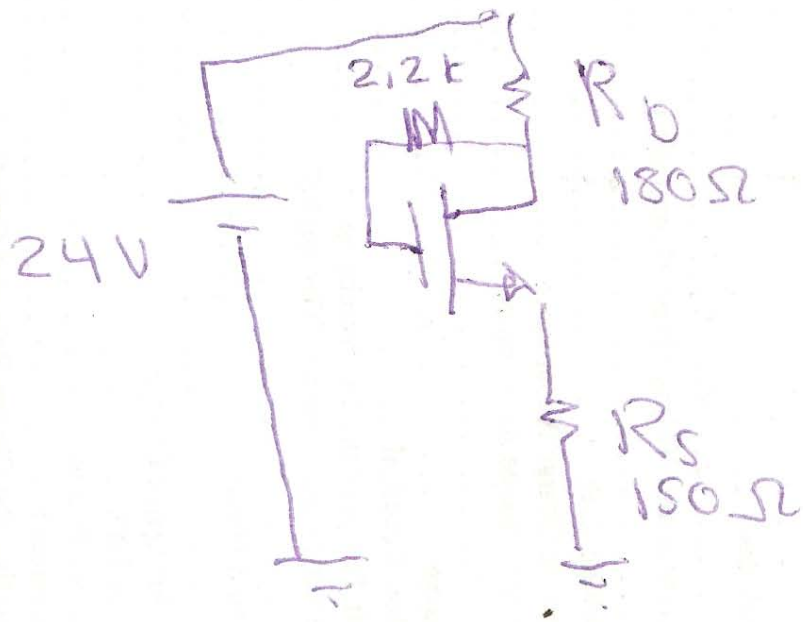

$V_t = 3{,}4V$

$K = 20 \frac{mA}{V^2}$

$$I_D = 20\left(V_{GS} - V_t\right)^2$$

$$V_{GS} = V_{DS}$$

$$24 = (0{,}18 + 0{,}15)\, I_D + v_{DS}$$

$$v_{GS} = v_{DS} = 24 - 0{,}33\, I_D$$

$$I_D = 20\left(24 - 0{,}33\, I_D - 3{,}4\right)^2$$

$$I_D = 20\left(20{,}6 - 0{,}33\, I_D\right)^2$$

$$I_D = 20\left(424{,}36 - 13{,}596\, I_D + 0{,}1089\, I_D^2\right)$$

$$0{,}05\, I_D = 424{,}36 - 13{,}596\, I_D + 0{,}1089\, I_D^2$$

$$0 = 424{,}36 - 13{,}646\, I_D + 0{,}1089\, I_D^2$$

$$I_D = \frac{13{,}646 \pm \sqrt{186{,}283 - 184{,}85}}{2 \times 0{,}1089} \begin{cases} \nearrow 57{,}29\ mA \\ \searrow 68{,}01\ mA \end{cases}$$

$$V_{GS} = 24 - 0{,}33 I_D$$

$$V_{GS_1} = 24 - 22{,}4 = 1{,}55 \quad \text{No}$$

$$V_{GS_2} = 24 - 18{,}9 = 5{,}1 \quad \text{Si}$$

$$\boxed{\begin{aligned} I_D &= 57{,}29 \text{ mA} \\ V_{DS} &= V_{GS} = 5{,}1 \text{ V} \end{aligned}}$$

PROBLEMA 2

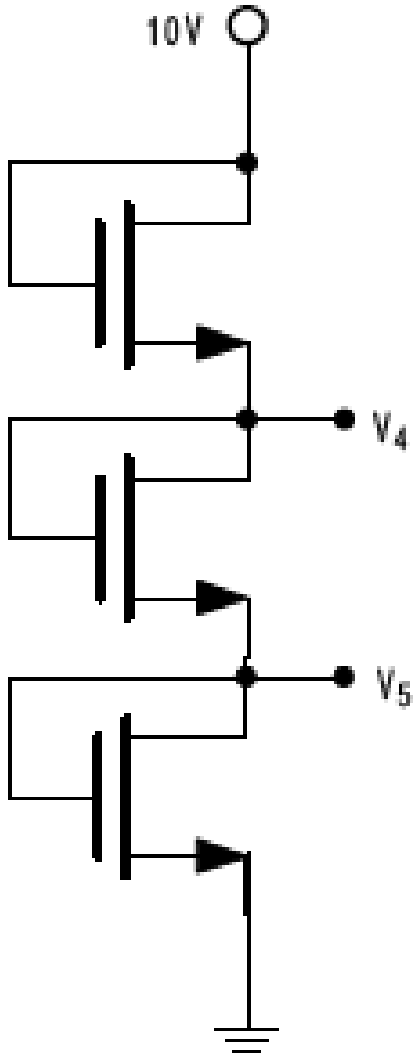

Vth = 1V

K = 0,5 mA/V^2

Hallar V_4 y V_5

$$I_{D1} = I_{D2} = I_{D3}$$

$$V_{GS1} = V_{GS2} = V_{GS3}$$

$$V_{DS1} = V_{GS1}$$

$$V_{DS2} = V_{GS2}$$

$$V_{DS3} = V_{GS3}$$

$$10\,V = V_{DS1} + V_{DS2} + V_{DS3}$$

$$10\,V = 3\,V_{DS1}$$

$$V_{DS1} = \frac{10}{3} = 3{,}33\,V$$

$$V_4 = (10 - 3{,}33)\,V = 6{,}67\,V$$

$$V_5 = (10\,V - 2 \times 3{,}33\,V) = 3{,}34\,V$$

PROBLEMA 3

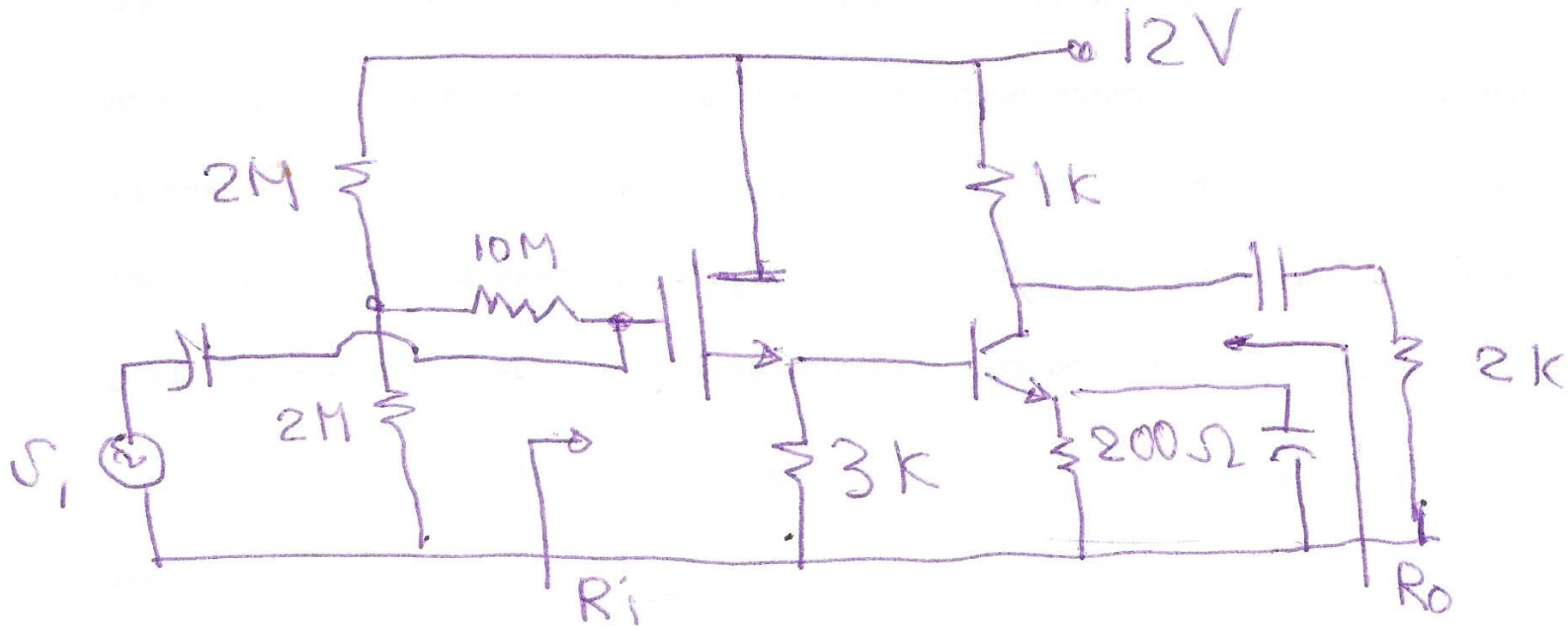

$V_t = 2V$ $\qquad$ $V_{BE} = 0{,}7V$

$K = 0{,}2 \frac{mA}{V^2}$ $\qquad$ $\beta = 200$

Hallar Av, Ri, Ro

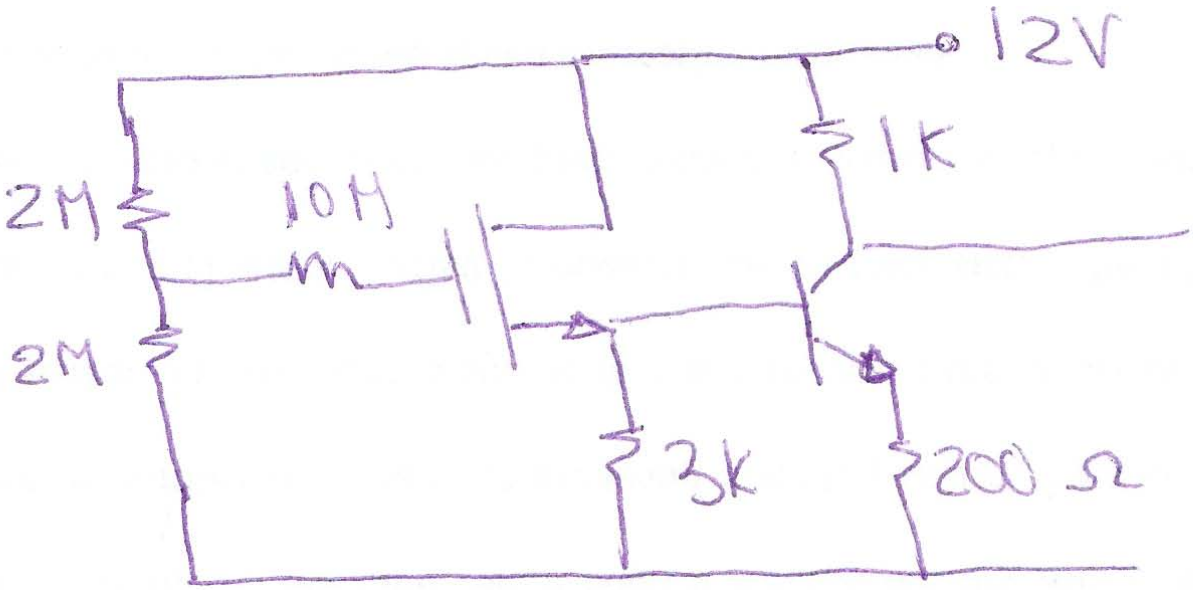
12V
1K
2M
10M
2M
3k
200 Ω

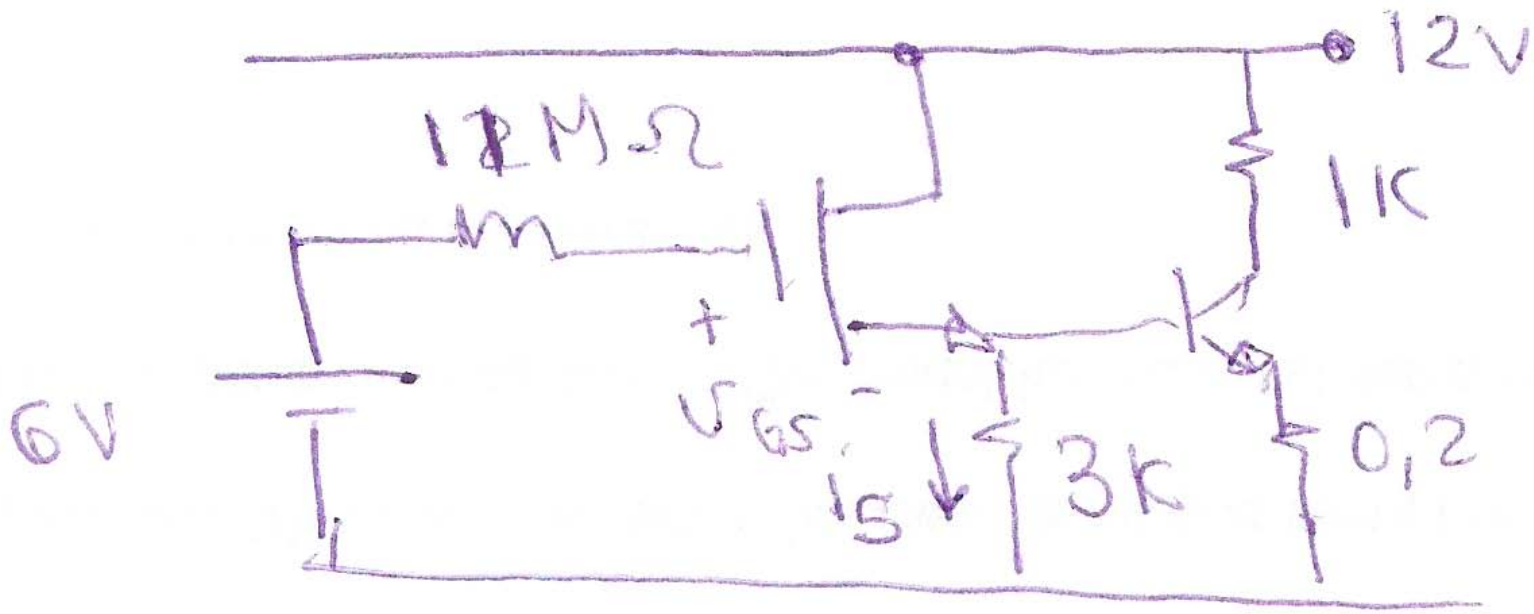
12V
12MΩ
1K
+
6V
v_{GS}
-
i_S
3k
0,2

$$6V = v_{GS} + i_D\, 3K$$

$$v_{GS} = 6V - 3 i_D$$

$$I_D = 0{,}2\,(v_{GS} - V_t)^2$$

$$I_D = 0{,}2\,(6 - 3I_D - 2)^2$$

$$I_D = 0{,}2\,(4 - 3I_D)^2$$

$$I_D = 0{,}2(16 - 24 I_D + 9 I_D^2)$$

$$I_D = 3{,}2 - 4{,}8 I_D + 1{,}8 I_D^2$$

$$0 = 3{,}2 - 5{,}8 I_D + 1{,}8 I_D^2$$

$$I_D = \frac{5{,}8 \pm \sqrt{33{,}64 - 23{,}04}}{2 \times 1{,}8} = \begin{cases} 2{,}5\ mA \\ 0{,}7\ mA \end{cases}$$

$$V_{GS} = 6 - 3 \times 2{,}5 = -1{,}5 \quad \text{No}$$

$$V_{GS} = 6 - 3 \times 0{,}7 = 3{,}9V$$

$$V_{DS} = 12 - 3 I_D = 9{,}9V$$

Se cumple $V_{DS} \geq V_{GS} - V_{th}$

Transistor en saturación

$$V_B = V_{BE} + i_E\, 0{,}2k$$

$$i_E = \frac{V_B - V_{BE}}{0{,}2} = \frac{2{,}1 - 0{,}7}{0{,}2} = 7\,mA$$

$$i_C \simeq i_E = 7\,mA$$

$$i_B = \frac{i_C}{200} = 0{,}035\,mA$$

$$v_{CE} = 12V - (1 + 0{,}2)\,7 = 3{,}6\,V$$

$$g_{m_2} = \frac{I_C}{V_T} = \frac{7\,mA}{0{,}025\,V} = 280\,\frac{mA}{V}$$

$$r_{\pi_2} = \frac{\beta}{280}\,\frac{V}{mA} = 0{,}714\,k\Omega$$

$$g_{m_1} = 2\sqrt{K I_D} = 2\sqrt{0{,}2 \times 0{,}7} = 0{,}75 \ \frac{mA}{V}$$

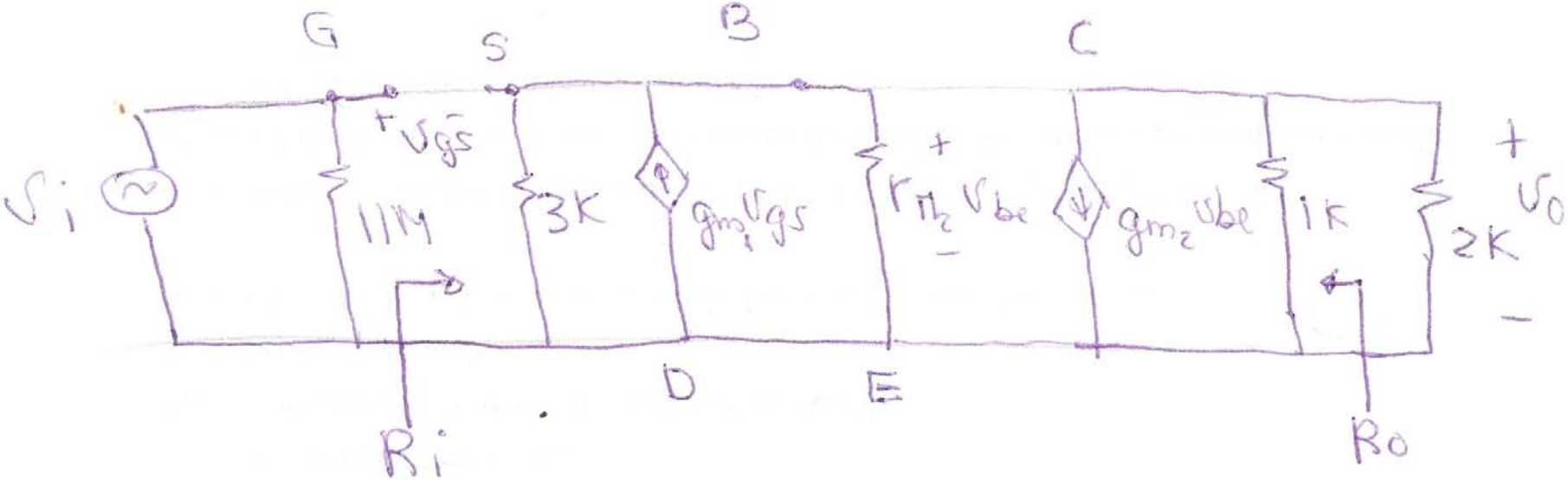

$$v_o = -g_{m_2} (1K \| 2K) v_{be}$$

$$v_{be} = (3K \| r_\pi) g_{m_1} v_{gs} = 0{,}433 \, v_{gs}$$

$$v_{gs} = \frac{1}{0{,}433} v_{be} = 2{,}31 \, v_{be}$$

$$v_i = v_{gs} + v_{be} = (2{,}31 + 1)\, v_{be}$$

$$v_{be} = \frac{v_i}{3{,}31} = 0{,}3\, v_i$$

$$v_o = -186{,}6 \times 0{,}3\, v_i$$

$$\boxed{A_v = \frac{v_o}{v_i} = -56}$$

$$R_i = \infty$$

Cálculo Ro

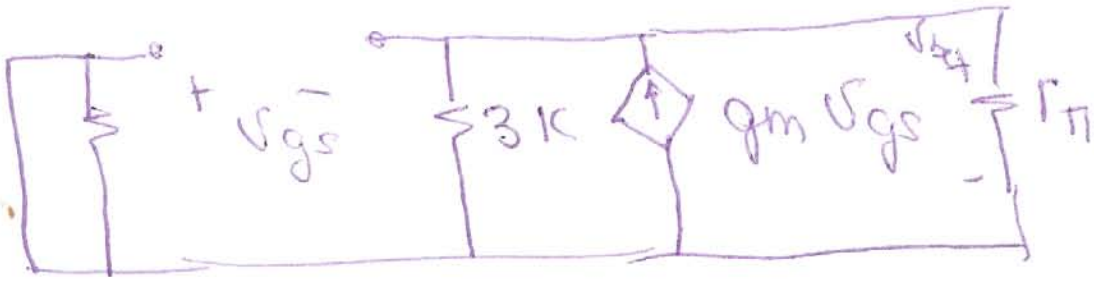

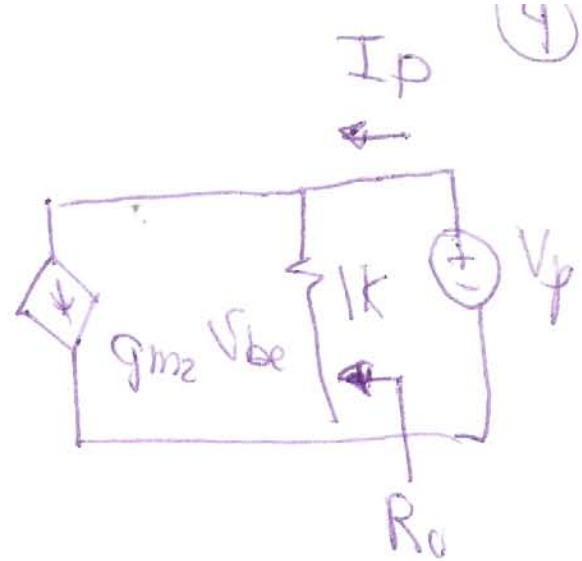

$$I_p = \frac{V_p}{1} + g_{m2} v_{be}$$

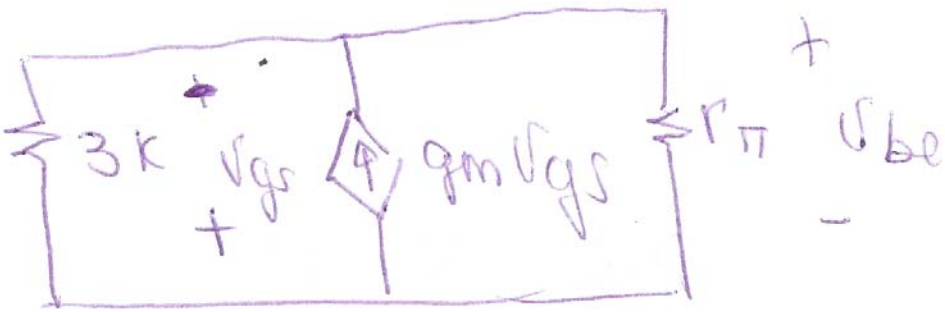

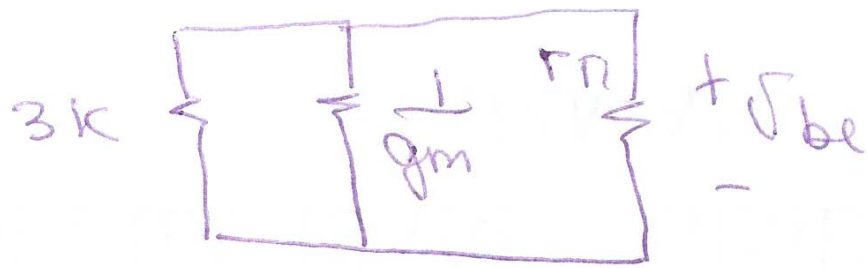

$v_{be} = 0$

$$\boxed{R_o = 1\,K\Omega}$$

PAR DARLINGTON CON DOS BJT

* Está constituido por dos etapas seguidores de emisor.
* Alta impedancia de entrada
* Efecto multiplicativo sobre la corriente

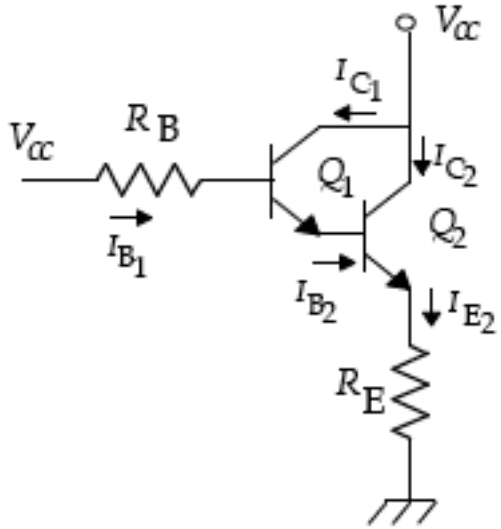

Análisis en DC

$$V_{CC} = I_{B_1} R_B + V_{BE_1} + V_{BE_2} + I_{E_2} R_E$$

$$I_{B_1} + I_{C_1} = I_{B_2} = (\beta_1 + 1)\, I_{B_1}$$

$$I_{E_2} = (\beta_2 + 1)\, I_{B_2} \qquad V_{BE_1} = V_{BE_2} = V_{BE}$$

$$I_{B1} = \frac{V_{CC} - 2V_{BE}}{R_B + (\beta_1 + 1)(\beta_2 + 1)\, R_{E_2}}$$

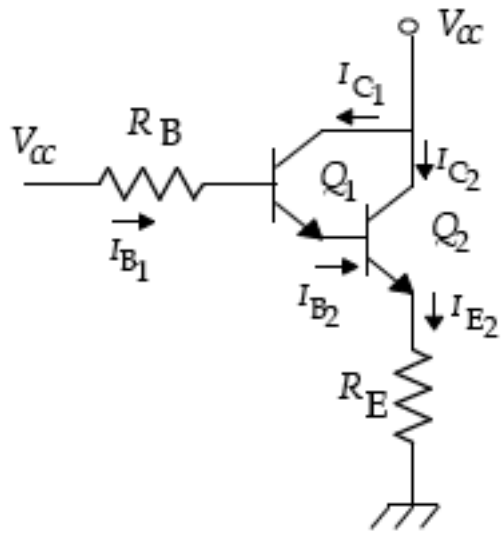

Cálculo de la corriente de colector total:

$I_{E2} = (\beta_2 + 1)\, I_{B2}$ $\qquad$ $I_{B2} = I_{E1} = (\beta_1 + 1)\, I_{B1}$

$$I_{E_2} = (\beta_2 + 1)(\beta_1 + 1)\, I_{B_1}$$

$$I_{C_2} \frac{(\beta_2 + 1)}{\beta_2} = (\beta_2 + 1)(\beta_1 + 1)\, I_{B_1} \qquad I_{C_2} = \beta_2 (\beta_1 + 1)\, I_{B_1}$$

Este es el efecto multiplicativo de la corriente

Análisis AC con el modelo de parámetros híbridos

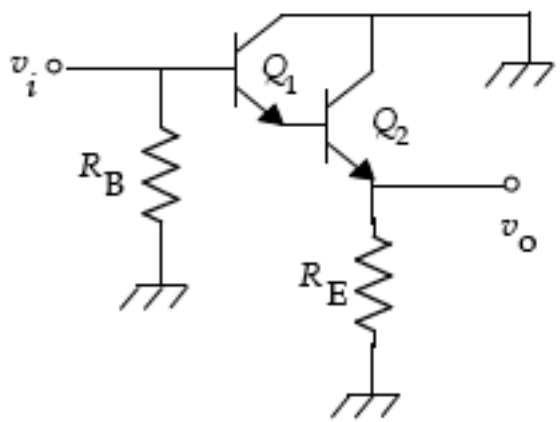

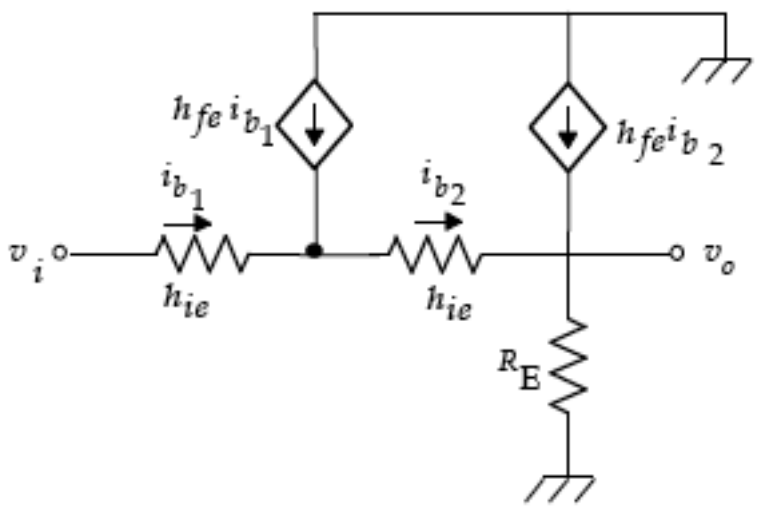

Cálculo de la ganancia de voltaje

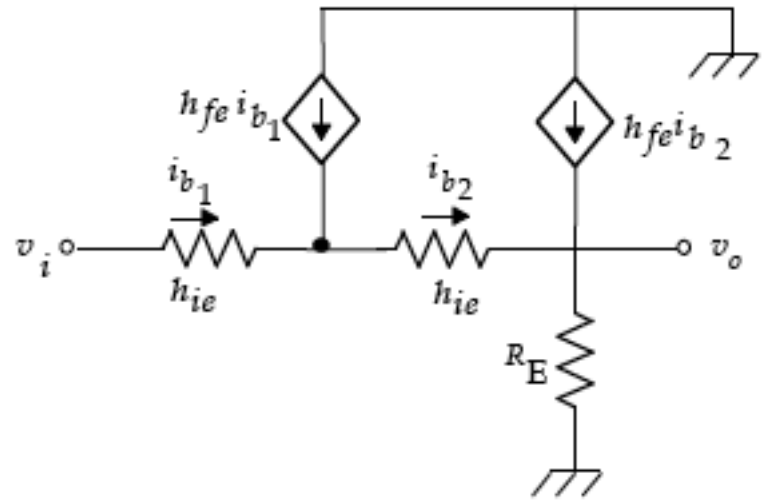

$$v_i = i_{b_1} h_{ie1} + i_{b_2} h_{ie_2} + v_o$$
$$v_o = i_{b_2} \left(1 + h_{fe_2}\right) R_E$$
$$i_{b2} = \left(h_{fe_1} + 1\right) i_{b_1}$$

$$v_i = i_{b_1} h_{ie_1} + i_{b_1} \left(h_{fe_1} + 1\right) h_{ie_2} + v_o$$
$$v_o = i_{b_1} \left(h_{fe_1} + 1\right) \left(1 + h_{fe_2}\right) R_E$$

$$v_o = \left(\frac{v_i - v_o}{h_{ie_1} + \left(h_{fe_1} + 1\right) h_{ie_2}}\right) \left(h_{fe_1} + 1\right) \left(1 + h_{fe_2}\right) R_E$$

$$\frac{v_o}{v_i} = \frac{\left(h_{fe_1} + 1\right) \left(1 + h_{fe_2}\right) R_E}{h_{ie_1} + \left(h_{fe_1} + 1\right) h_{ie_2} + \left(h_{fe_1} + 1\right) \left(1 + h_{fe_2}\right) R_E}$$

Si h_{fe_1}, $h_{fe_2} >> 1$, se comporta como seguidor de emisor.

$$\frac{v_o}{v_i} = \frac{R_E}{\frac{h_{ie1} + (h_{fe1}+1) h_{ie2}}{(h_{fe1}+1)(1+h_{fe2})} + R_E} \cong 1$$

Cálculo de la impedancia de entrada. De las ecuaciones:

$$v_i = i_{b_1} h_{ie_1} + i_{b_1} \left(h_{fe_1} + 1\right) h_{ie_2} + v_o$$

$$v_o = i_{b_1} \left(h_{fe_1} + 1\right) \left(1 + h_{fe_2}\right) R_E$$

$$v_i = i_{b_1} \left\{h_{ie_1} + \left(h_{fe_1} + 1\right) h_{ie_2} + \left(h_{fe_1} + 1\right) \left(1 + h_{fe_2}\right) R_E\right\}$$

$$Z_{in} = \frac{v_i}{i_{b_1}} \qquad Z_{in} = h_{ie_1} + \left(h_{fe_1} + 1\right) \left(h_{ie_2} + \left(1 + h_{fe_2}\right) R_E\right)$$

Tiene un valor elevado si $h_{fe_1}, h_{fe_2} >> 1.$

Cálculo de la ganancia de corriente

$$i_o = i_{b_2} \left(1 + h_{fe_2}\right) \text{ e } i_{b_2} = i_{b_1} \left(1 + h_{fe_1}\right)$$

$$A_i = \frac{i_o}{i_i} = \frac{i_{b_2} \left(1 + h_{fe_2}\right)}{i_{b_1}} = \frac{i_{b_1} \left(1 + h_{fe_1}\right) \left(1 + h_{fe_2}\right)}{i_{b_1}}$$

$$A_i = \left(1 + h_{fe_1}\right) \left(1 + h_{fe_2}\right)$$